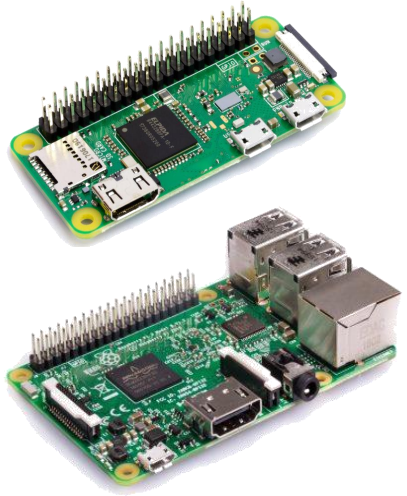

Raspberry Pi

-electronic work for controlling a robot-

Part #1

2019. 08. 01. (Thur.)

Dai Owaki, Ph. D,

Asocci. Prof. Neuro-robotics Lab. (Hayashibe Lab.),

Dept. of Robotics, Graduate School of Engineering,

Tohoku University

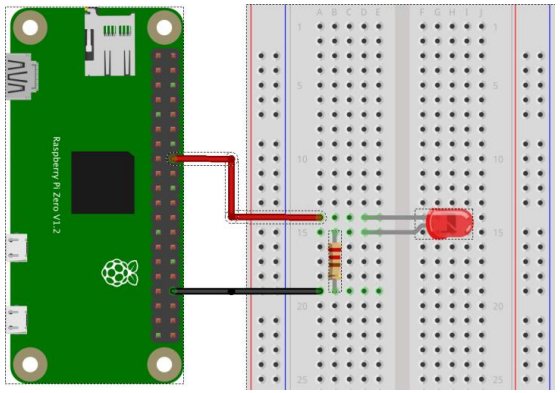

Presenter:

Hannan Ahmed, Master's 1st Year

Let's Enjoy Electronic Work with *Raspberry Pi*

- ✓ *Electronic work* is good education topics for both making things (e.g. robot) and coding software (e.g. using C++, python)

- ✓ *Raspberry Pi* is a good tool for this, because it's cheap (cheapest 5USD), high spec (lowest CPU around 1GHz), installed a Linux OS (Raspbain), control electronic devices (GPIO pins), wireless (wifi & Bluetooth), easy to use cameras (take pics & movies), and much information on the web communities!!!

- ✓ The point is "*enjoy the electronic work*"

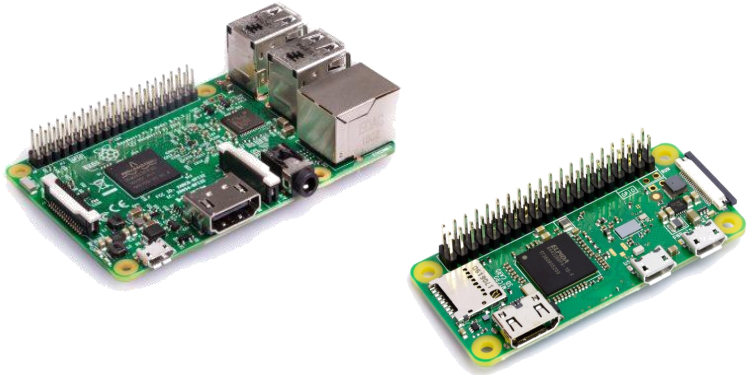

Spec of Raspberry Pi

	Raspberry Pi 2 Model B	Raspberry Pi 3 Model B	Raspberry Pi Zero	Raspberry Pi Zero W
CPU	ARM Cortex-A7 (900MHz) クアッドコア	ARM Cortex-A53 (1.2GHz) クアッドコア	ARM1176JZF-S (1GHz) シングルコア	
SoC	Broadcom BCM2836	Broadcom BCM2837	Broadcom BCM2835	
グラフィック	Broadcom VideoCore IV (250MHz)			
メモリー	1Gバイト		512Mバイト	
USBインタフェース	USB 2.0×4ポート		USB 2.0 (microUSB) ×1ポート	
ビデオ出力	HDMI、コンポジット (NTSC, PAL)、DSI		Mini-HDMI、コンポジット (GPIO経由)	
ビデオ入力	CSI		CSI (小型タイプ)	
オーディオ出力	φ3.5mmジャック、HDMI、I2S		HDMI、GPIOから出力可能	
ストレージ用スロット	microSDカードスロット			
ネットワーク	10/100Mbps Ethernet	10/100Mbps Ethernet、IEEE802.11b/g/n	無し	IEEE802.11b/g/n
Bluetooth	無し	Bluetooth 4.1、Bluetooth Low Energy	無し	Bluetooth 4.1、Bluetooth Low Energy
その他インタフェース	GPIO、UART、I²C、SPI			
電源出力端子	3.3V、5V			
電源電圧／電力定格	5V / 3W (600mA)	5V / 4.5W (800mA)	5V / 0.8W (160mA)	
サイズ	85.6mm×56.5mm		65mm×30mm	
重さ	45g			9g

35USD 35USD 5USD 10USD

Hardware Configurations on Raspberry Pi Zero W

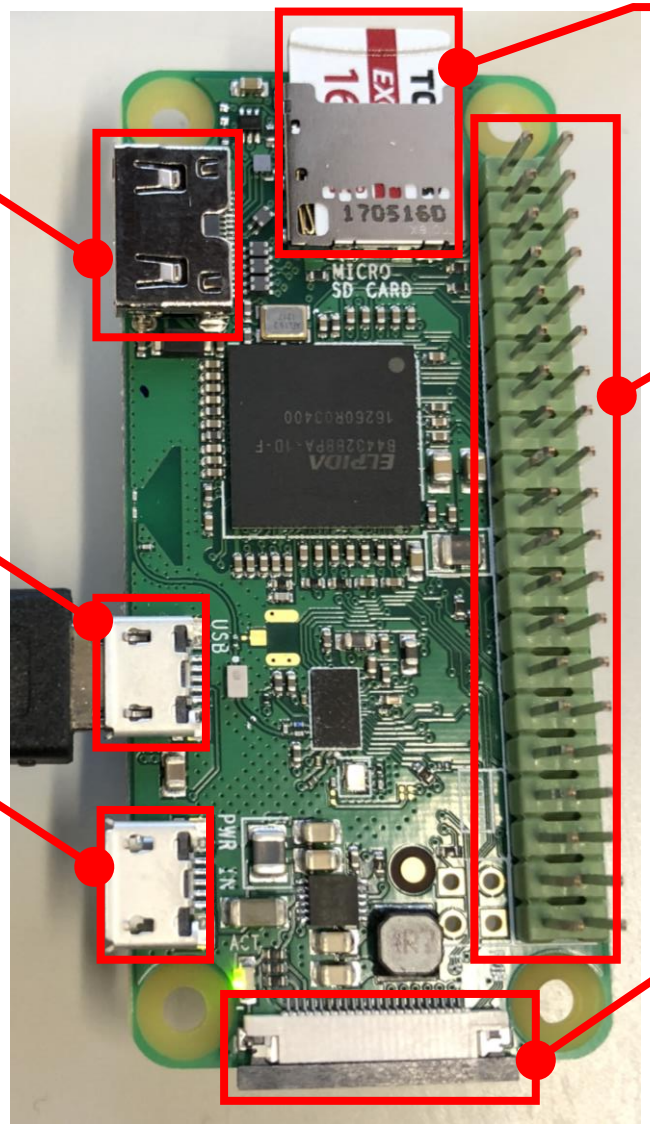

What do you need to begin *Raspbarry Pi*?

Required

- Raspberry Pi (3 or Zero W are recommended)
- Micro SD card (more than 4GB (16GB&class 10 is better))
- Micro-USB cable (for Zero W) or LAN-USB cable for (3):
  Data communication cable (USB OTG: On-the-Go cable)
  not only for power supply

Optional

- Power 5V
- Display (HDMI input)
- Keyboard (USB or Bluetooth)
- Mouse (USB or Bluetooth)

One of purposes of today's lecture is to use raspberry pi without these annoying things!

Step 1: Connecting to RasPi via SSH

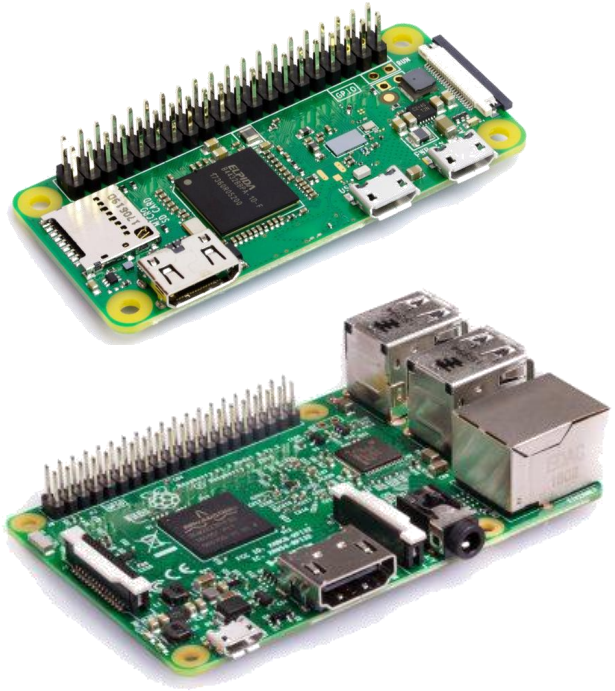

$ssh pi@raspberrypi.local

pi = username
raspberrypi = local hostname

SSH = Secure Shell
-> Protocol for connection to remote computer

Install Software in Your PC

Tera Term

VNC Viewer

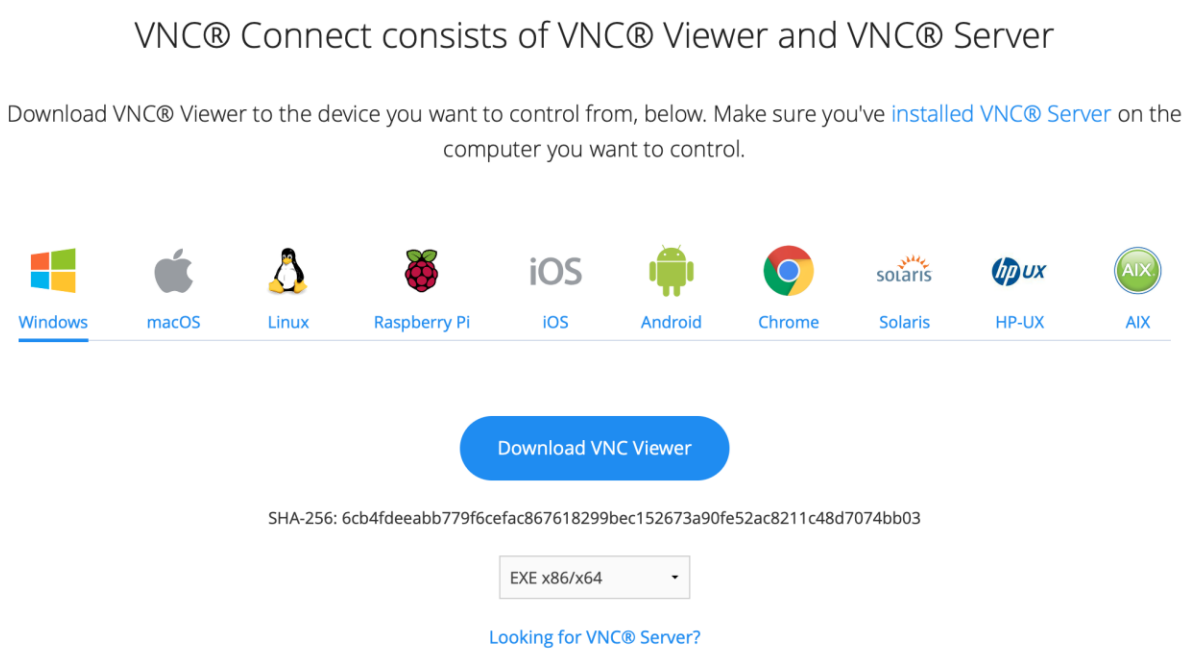

Rapbain OS has been installed. Let’s Boot!!

Overview of Raspberry Pi Zero W

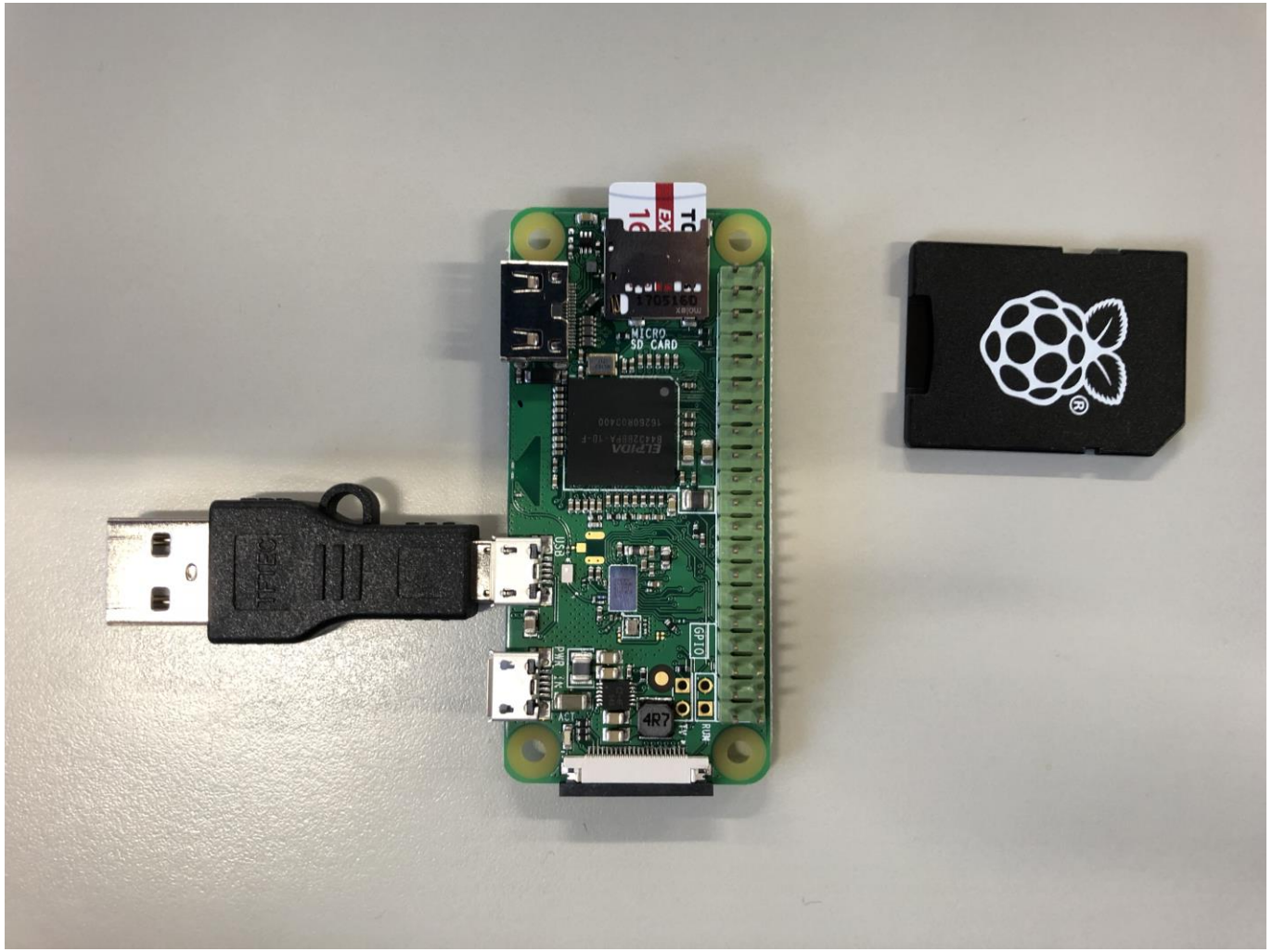

Just connecting to USB port!

Power is supplied via the port

SSH connection to Raspi via Tera Term

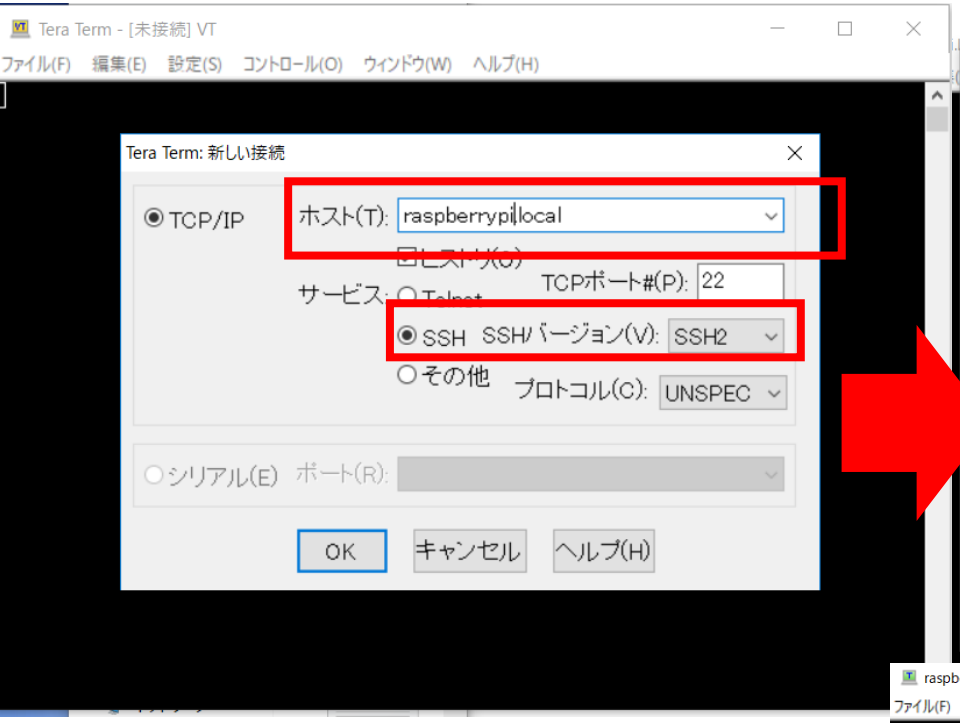

hostname = raspberrypi.local (initial)

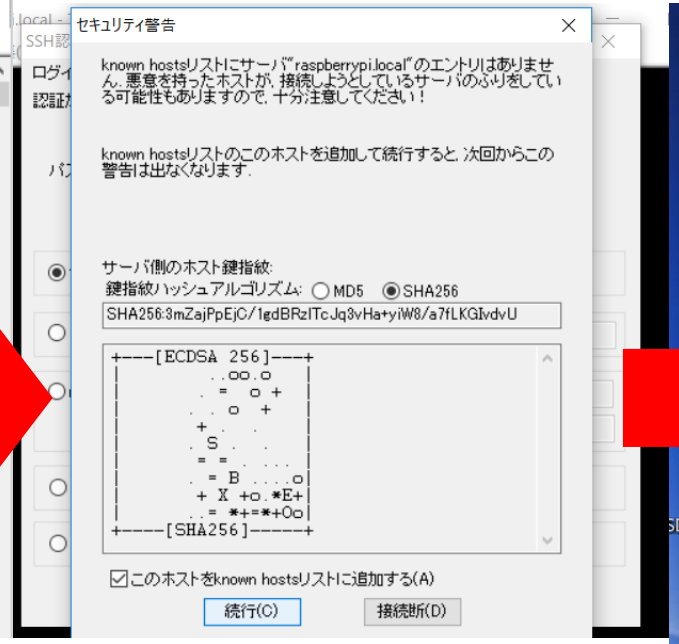

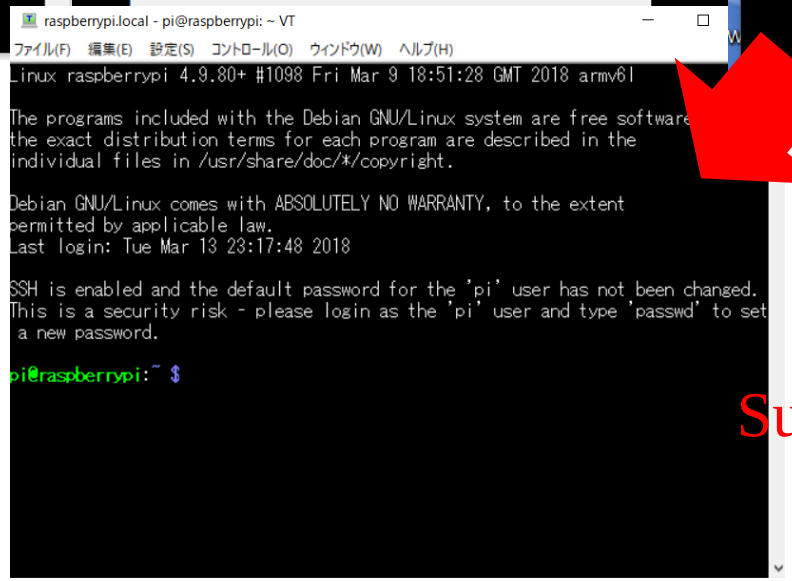

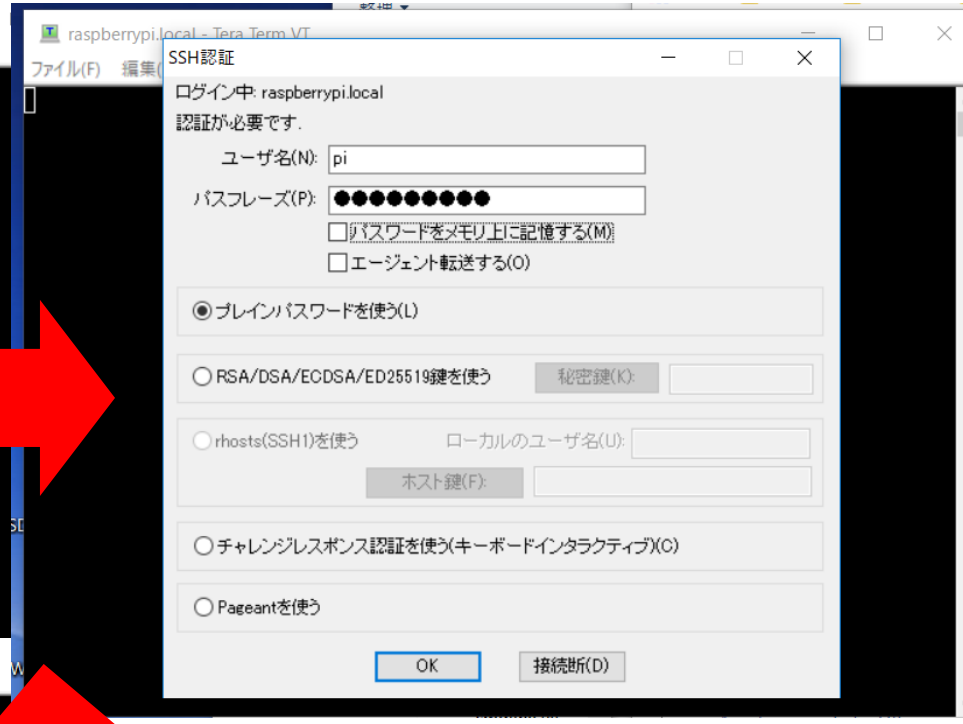

username = pi
pass = raspberry (initial)

Success connection (PC to raspi) !!!

Checking IP Address of Raspberry Pi

raspberrypi.local - pi@raspberrypi: ~ VT

ファイル(F) 編集(E) 設定(S) コントロール(O) ウィンドウ(W) ヘルプ(H)

```
pi@raspberrypi:~ $ ifconfig
lo: flags=73<UP,LOOPBACK,RUNNING>  mtu 65536
        inet 127.0.0.1  netmask 255.0.0.0
        inet6 ::1  prefixlen 128  scopeid 0x10<host>
        loop  txqueuelen 1  (Local Loopback)
        RX packets 0  bytes 0 (0.0 B)
        RX errors 0  dropped 0  overruns 0  frame 0
        TX packets 0  bytes 0 (0.0 B)
        TX errors 0  dropped 0 overruns 0  carrier 0  collisions 0

usb0: flags=4163<UP,BROADCAST,RUNNING,MULTICAST>  mtu 1500
        inet 192.168.137.177  netmask 255.255.255.0  broadcast 192.168.137.255
        inet6 fe80::726c:9cc9:fc25:ba62  prefixlen 64  scopeid 0x20<link>
        ether 02:22:82:ff:ff:11  txqueuelen 1000  (Ethernet)
        RX packets 510  bytes 104905 (102.4 KiB)
        RX errors 0  dropped 0  overruns 0  frame 0
        TX packets 187  bytes 34895 (34.0 KiB)
        TX errors 0  dropped 0 overruns 0  carrier 0  collisions 0

wlan0: flags=4099<UP,BROADCAST,MULTICAST>  mtu 1500
        ether b8:27:eb:4e:a4:59  txqueuelen 1000  (Ethernet)
        RX packets 0  bytes 0 (0.0 B)
        RX errors 0  dropped 0  overruns 0  frame 0
        TX packets 0  bytes 0 (0.0 B)
        TX errors 0  dropped 0 overruns 0  carrier 0  collisions 0

pi@raspberrypi:~ $
```

$ ifconfig

IP Address for the Internet connection via USB.

192.168.137.*** -> Success!!!

IP Address for the Internet connection via Wifi module on Raspberry pi.

Now, not connected via Wifi

Checking for the Internet Connection

$ ping 8.8.8.8

```
pi@raspberrypi:~ $ ping 8.8.8.8
PING 8.8.8.8 (8.8.8.8) 56(84) bytes of data.
64 bytes from 8.8.8.8: icmp_seq=1 ttl=53 time=8.17 ms
64 bytes from 8.8.8.8: icmp_seq=2 ttl=53 time=8.97 ms
64 bytes from 8.8.8.8: icmp_seq=3 ttl=53 time=8.87 ms
64 bytes from 8.8.8.8: icmp_seq=4 ttl=53 time=8.47 ms
64 bytes from 8.8.8.8: icmp_seq=5 ttl=53 time=8.84 ms
64 bytes from 8.8.8.8: icmp_seq=6 ttl=53 time=7.79 ms
64 bytes from 8.8.8.8: icmp_seq=7 ttl=53 time=14.4 ms
64 bytes from 8.8.8.8: icmp_seq=8 ttl=53 time=8.68 ms
```

Successfully connecting the internet via PC

Reboot of Rapberry Pi via SSH

$ sudo reboot

-> disconnect Teratern and LED on Raspi will be blinking (rebooting)
”sudo” means execute a command with “administrative right”

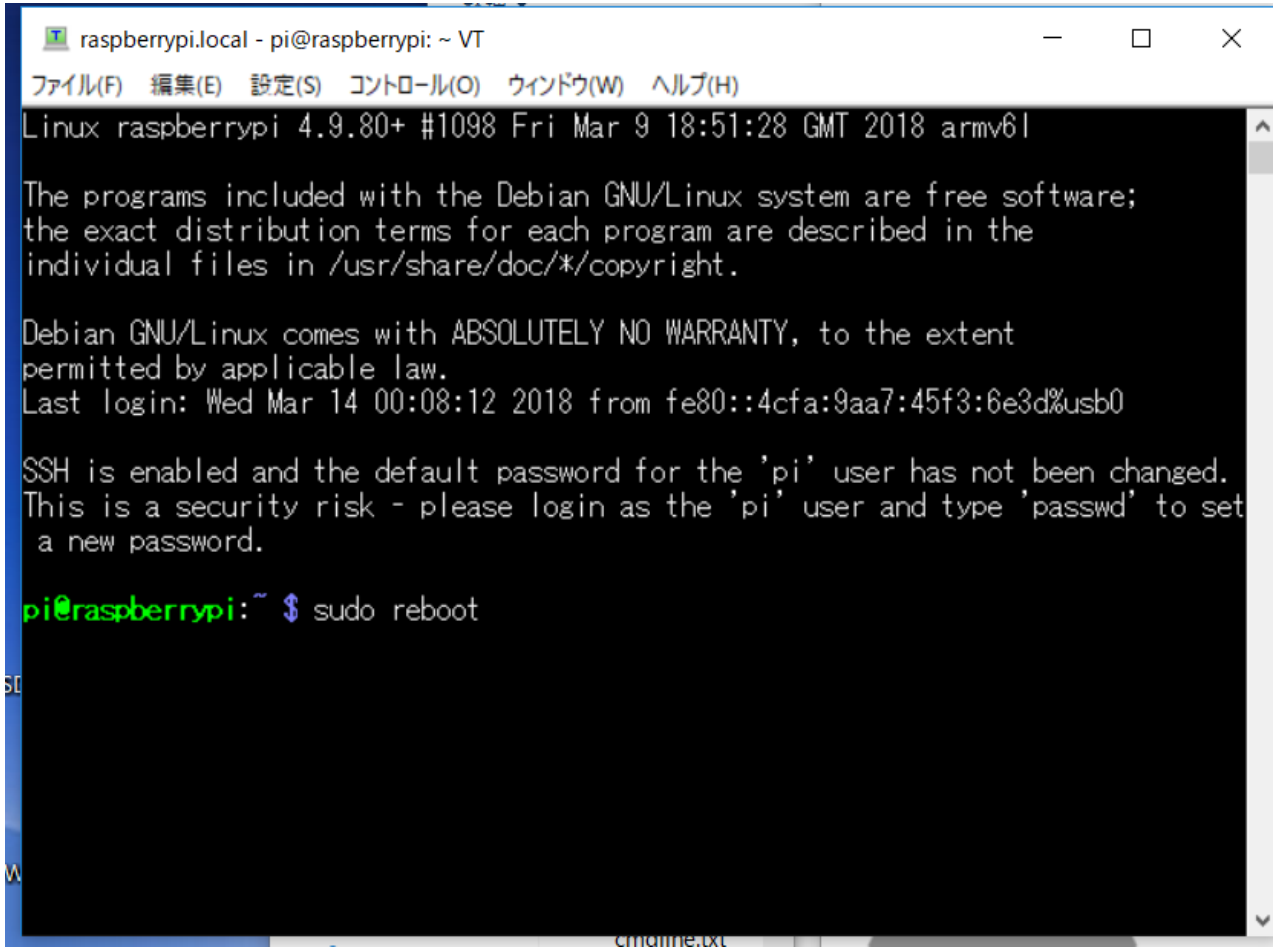

Step 2: Connecting via VNC

VNC (Virtual Network Computing) = Remote control of raspberry pi (or some PC) via network

Server software on Raspi (host, already installed) and client software (viewer) on PC
-> you don’t need display, keybord, and mouse for Raspi, PC will become them via VNC

Raspbian

VNC Viewer on PC

raspberrypi.local (=hostname)

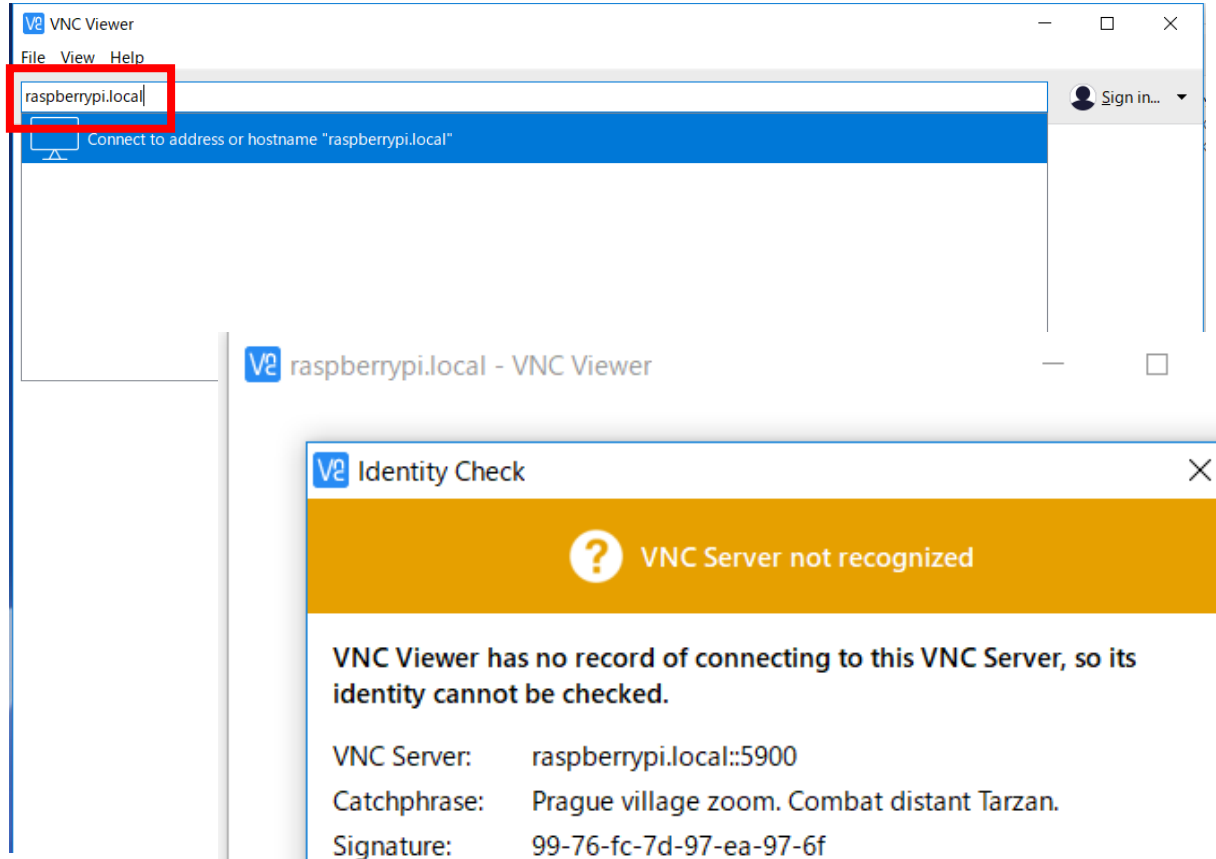

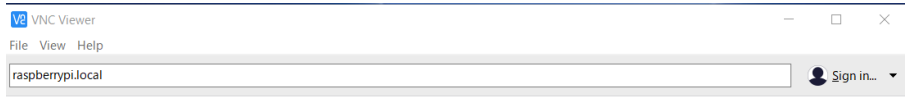

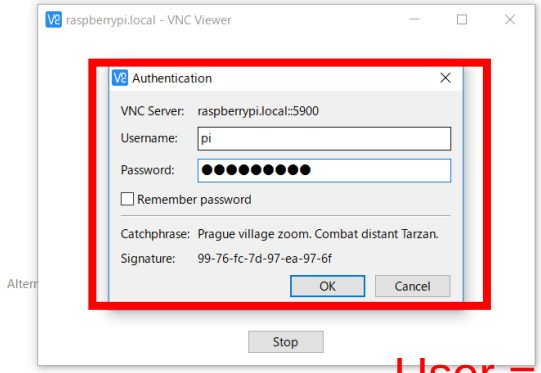

User = pi
Pass = raspberry

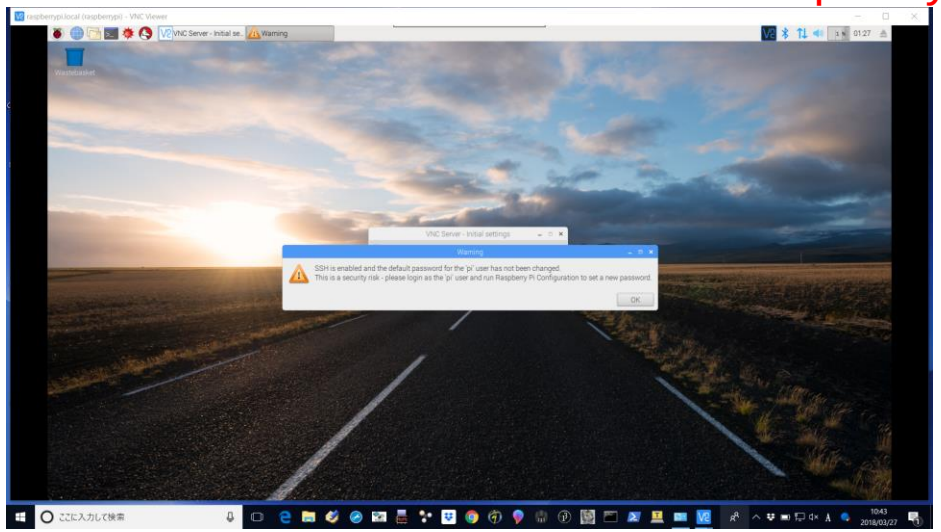

Success!!!, You can manage Raspi via PC

Connecting to Raspi’s disk via Samba

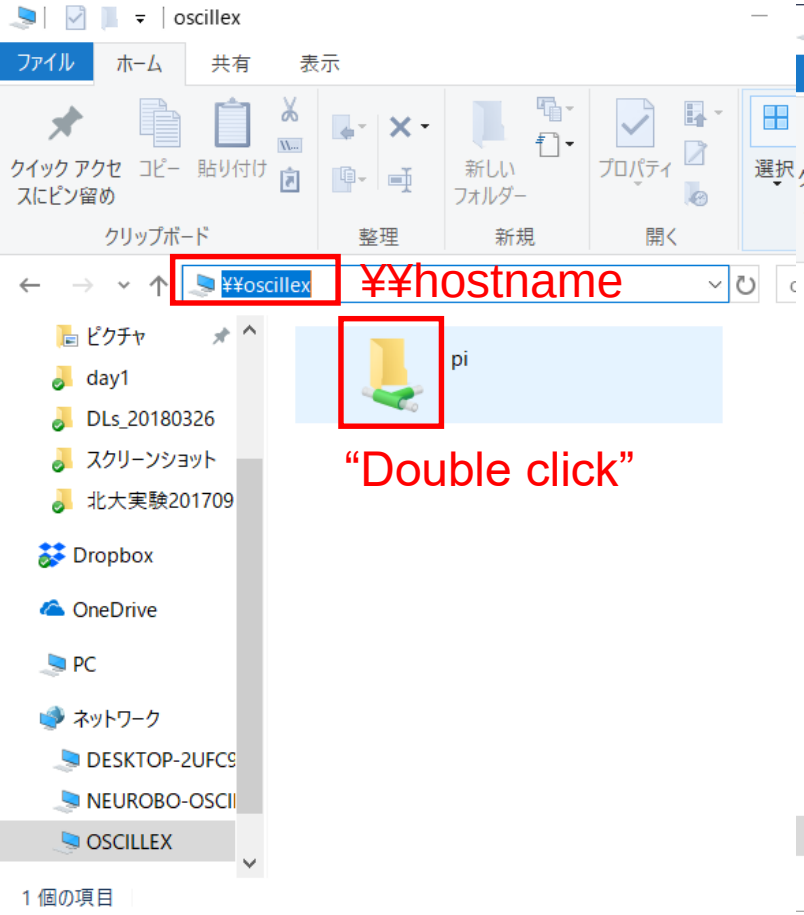

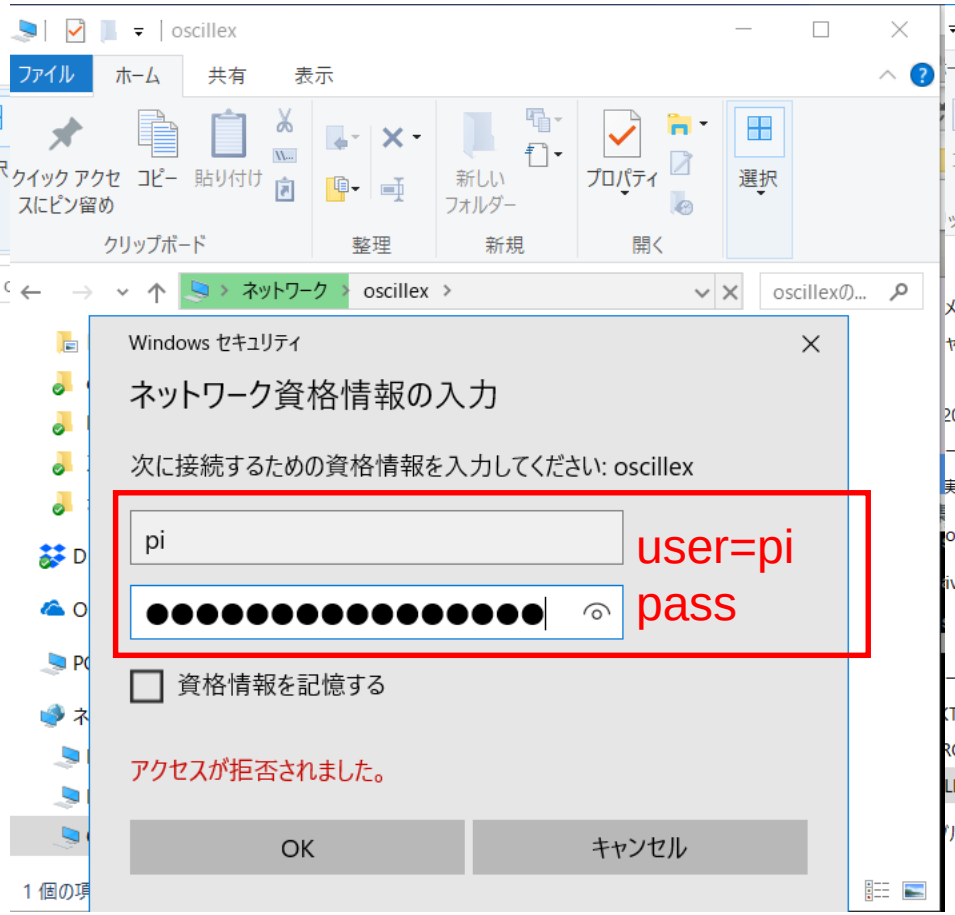

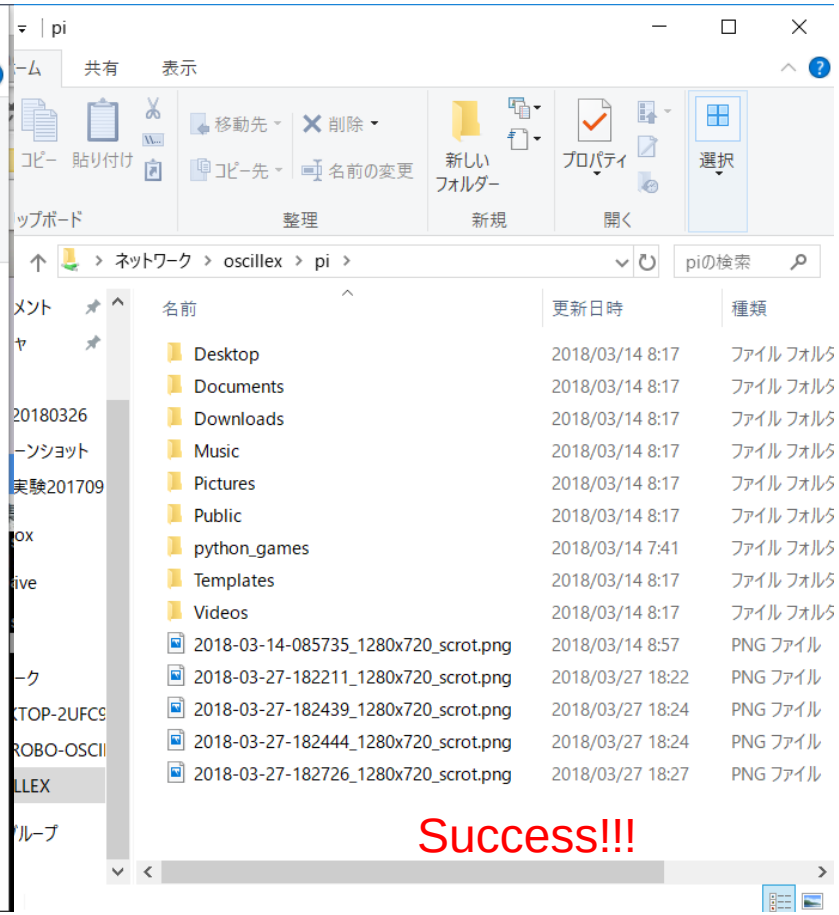

Power off Raspberry Pi

$ sudo poweroff

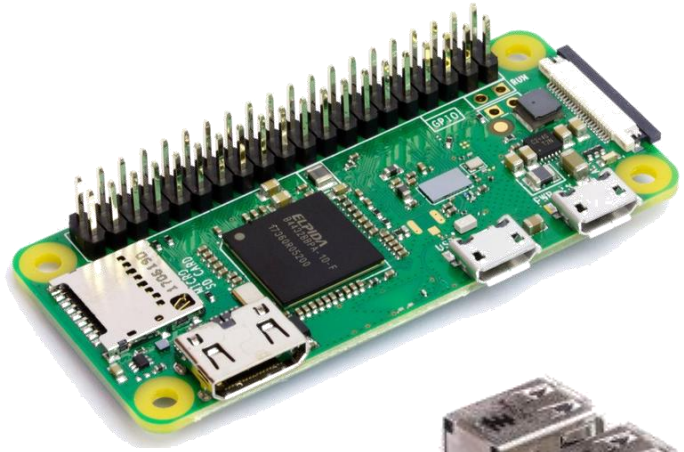

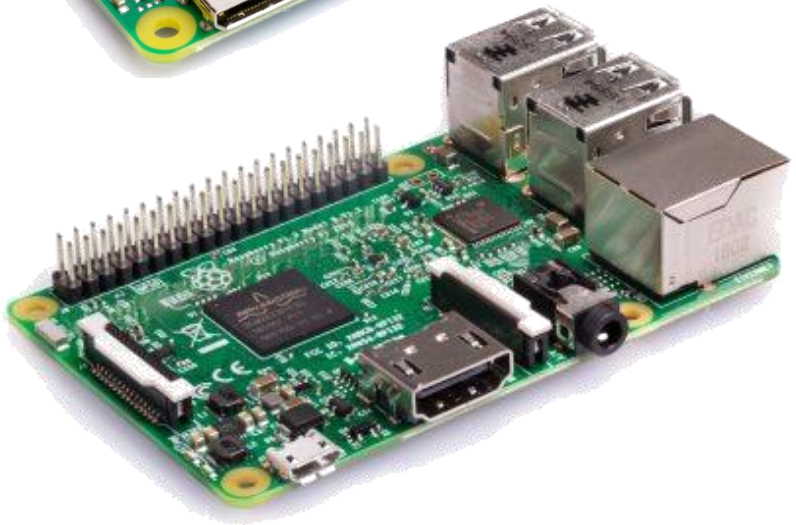

I/O Interfaces on Raspberry PI

SD side is up

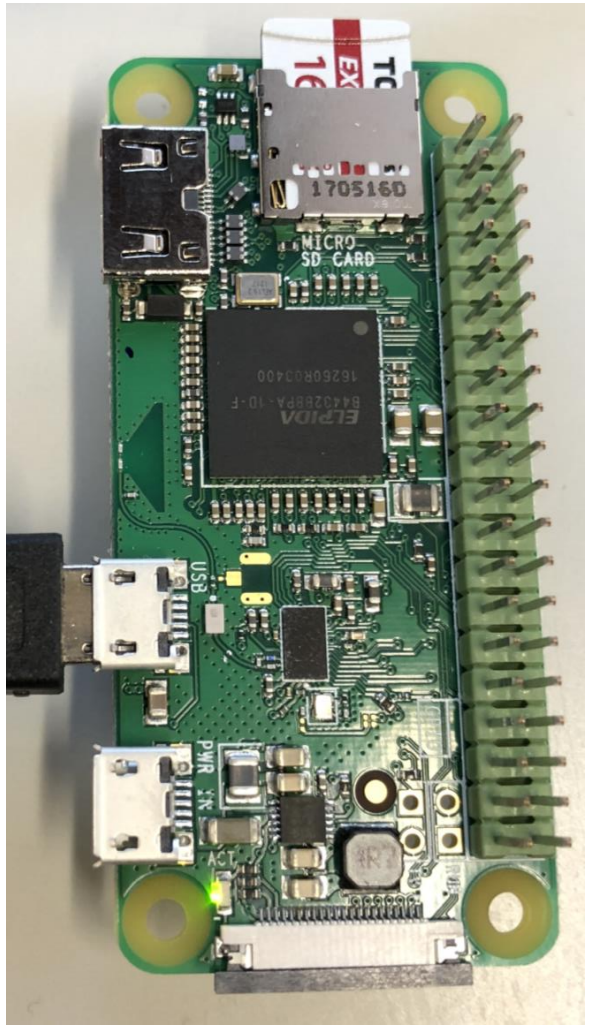

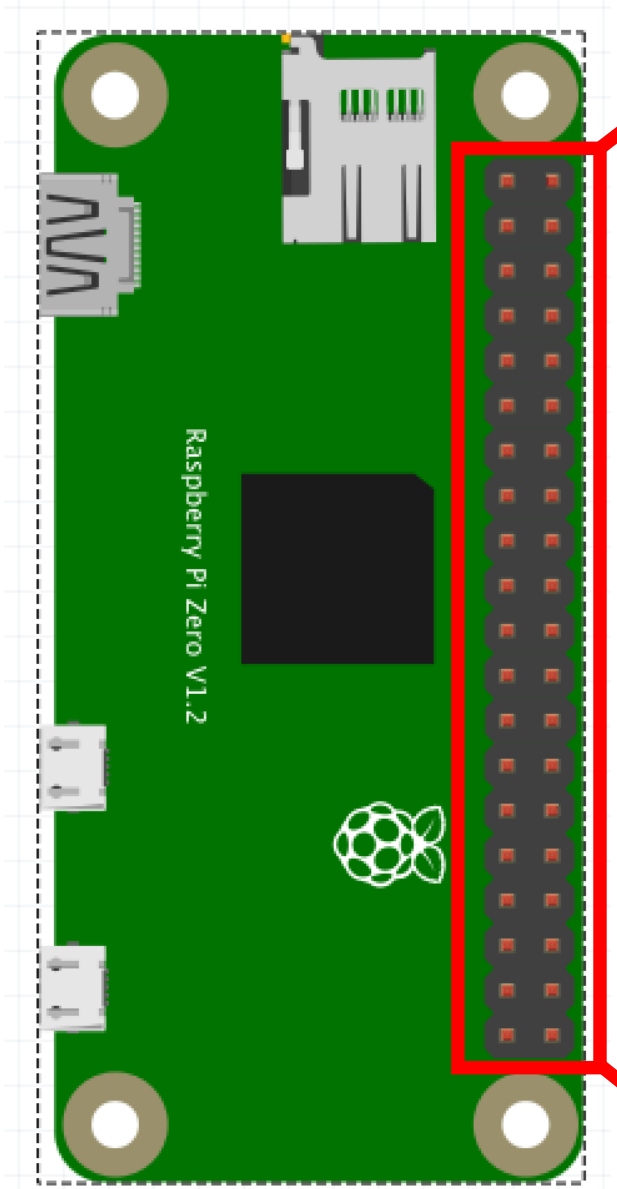

1	+3.3V			+5V		2
3	SDA	2		+5V		4
5	SCL	3		GND		6
7		4		14	TxD	8
9	GND			15	RxD	10
11		17		18		12
13		27		GND		14
15		22		23		16
17	+3.3V			24		18
19	MOSI	10		GND		20
21	MISO	9		25		22
23	SCLK	11		8	CE0	24
25	GND			7	CE1	26
27	ID_SD			ID_SC		28
29		5		GND		30
31		6		12		32
33		13		GND		34
35		19		16		36
37		26		20		38
39	GND			21		40

GPIO (General Purpose Input/Output)

+3.3V		1	2	+5V	
SDA	2	3	4	+5V	
SCL	3	5	6	GND	
	4	7	8	14	TxD
GND		9	10	15	RxD
	17	11	12	18	
	27	13	14	GND	
	22	15	16	23	
+3.3V		17	18	24	
MOSI	10	19	20	GND	
MISO	9	21	22	25	
SCLK	11	23	24	8	CE0
GND		25	26	7	CE1
ID_SD		27	28	ID_SC	
	5	29	30	GND	
	6	31	32	12	
	13	33	34	GND	
	19	35	36	16	
	26	37	38	20	
GND		39	40	21	

Power: +3.3V (1&17) and +5V(2 & 4) can use for power supply to electronic devices or input for circuit

GND (6,9,11,20,25,30,34,39): 0V output pins

GPIO(white): General Purpose input and output pins (3.3V or 0 V)

UART (Universal Asynchronous Receiver Transmitter):
2-wired (TxD: Transmit, RxD: Receive) Communication to PC or electronics devices

I2C (Inter-Integrated Circuit): Communication standard to electronics devices (motors and sensors). SDA (3) is for data transmission and reception. SCL (5) is for clock synchronization between devices.

SPI (Serial Peripheral Interface): Communication standard to electronics devices. MOSI (19)=data transmission, MISO (21)=data reception, SCLK (23)=synchronization between devices, CE0(24), CE1(26) = port for selecting the target device

Pin Configuration

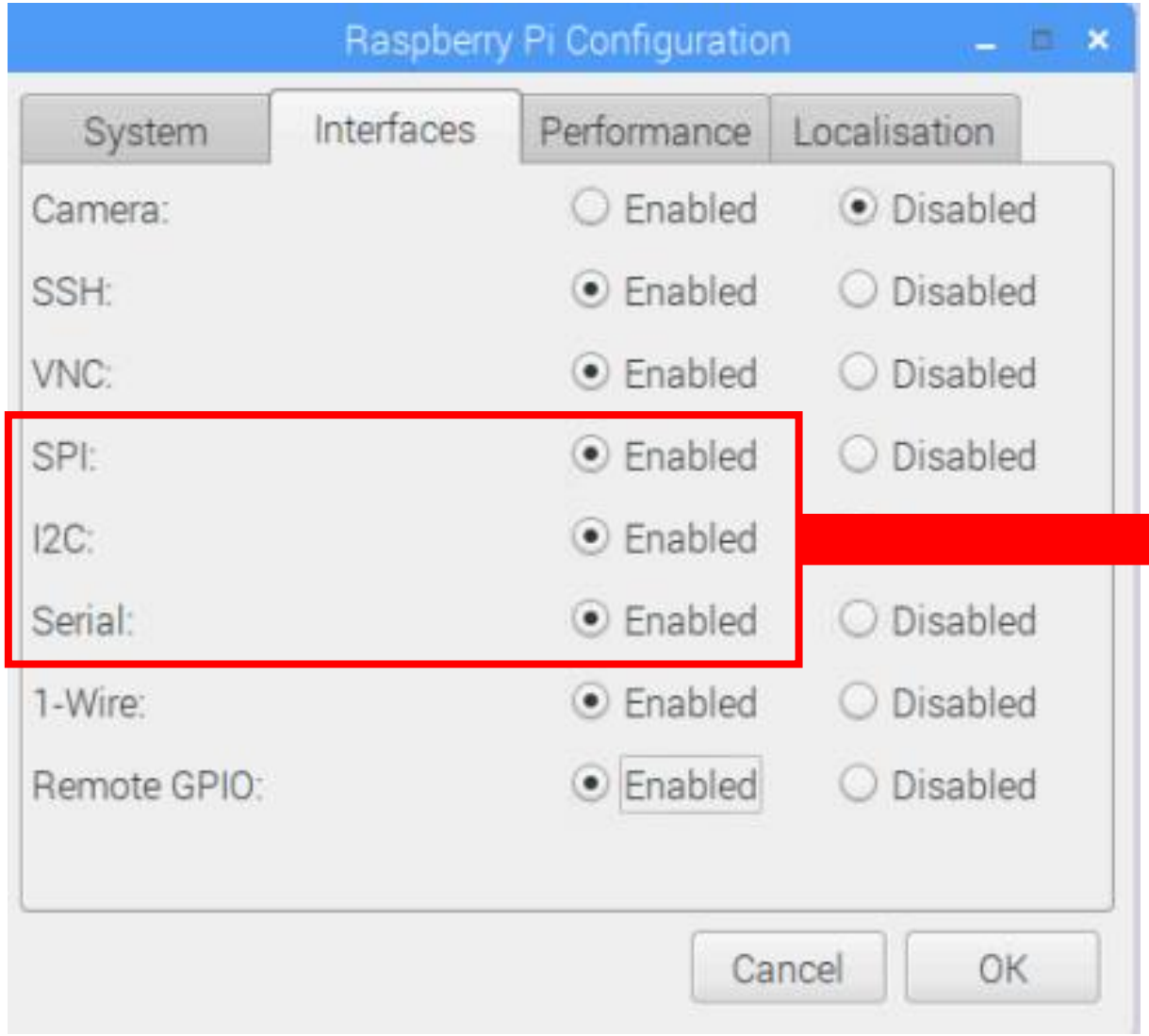

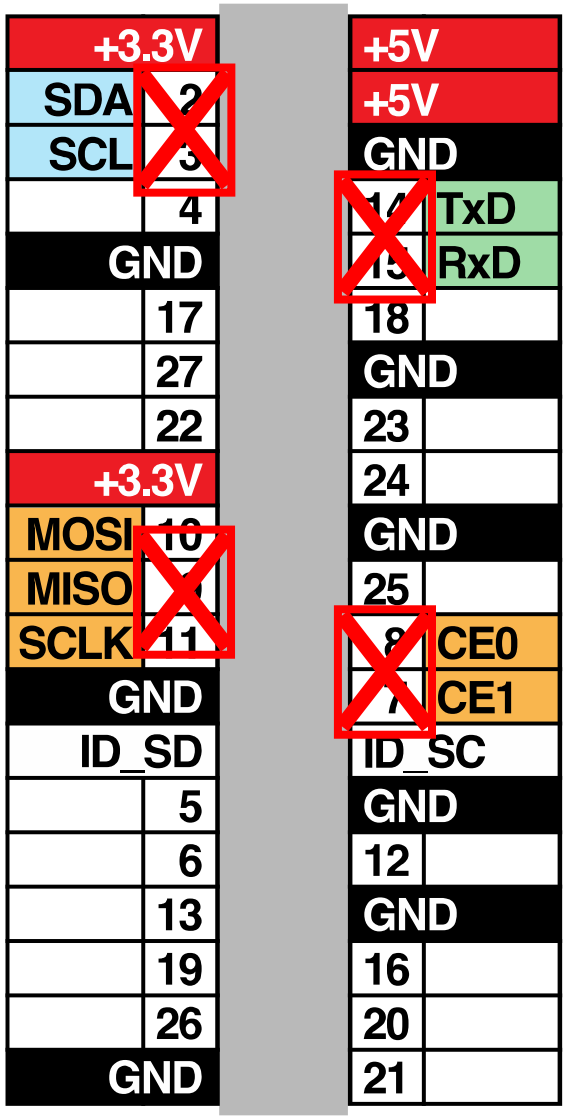

If you activate these interfaces, you cannot use these pins as GPIO (Digital I/O or PWM)

How to control LEDs and Motors

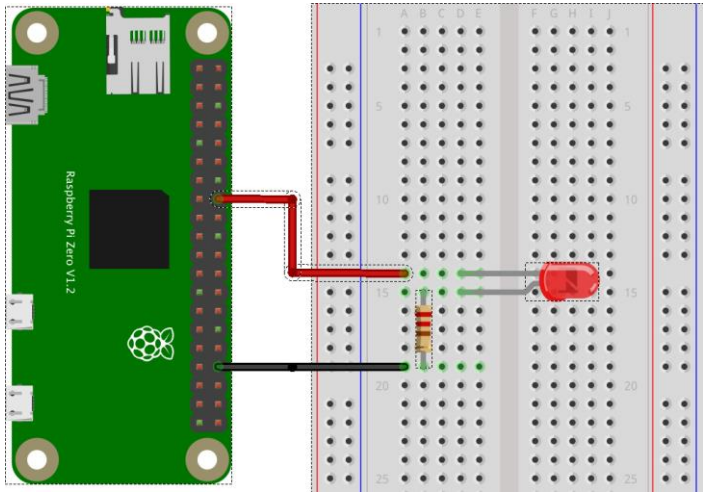

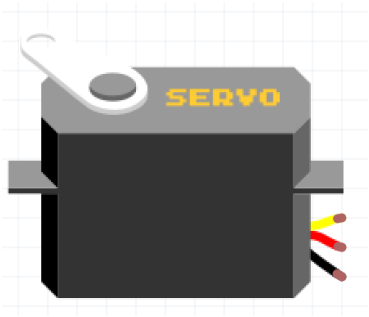

Libraries for Using GPIO with Python

- raspberry-gpio-python: PRI.GPIO, standard libraries for python
- WiringPI: High-performance lib., support for the use of I2C and SPI

<u>Installing WiringPI</u>

```
$ sudo pip install wiringpi
```

<u>Importing WiringPI module for python</u>

```
import wiringpi (as pi)
```

Which is Anode(+) or Cathode(-) on a LED?

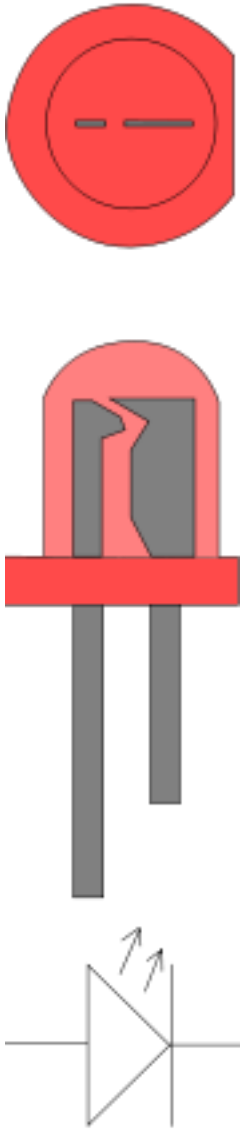

1. Can you find anode/cathode if you are given an LED without any information?
2. What if the wires were cut?

Tips: How to Use Breadboard

- ✓ Prototyping board to make a test electronic circuit
- ✓ For examples, green lined holes are electrically connected on the background
- ✓ All red lined holes (e.g. for +V) and blue lined holes (e.g. for GND) are connected

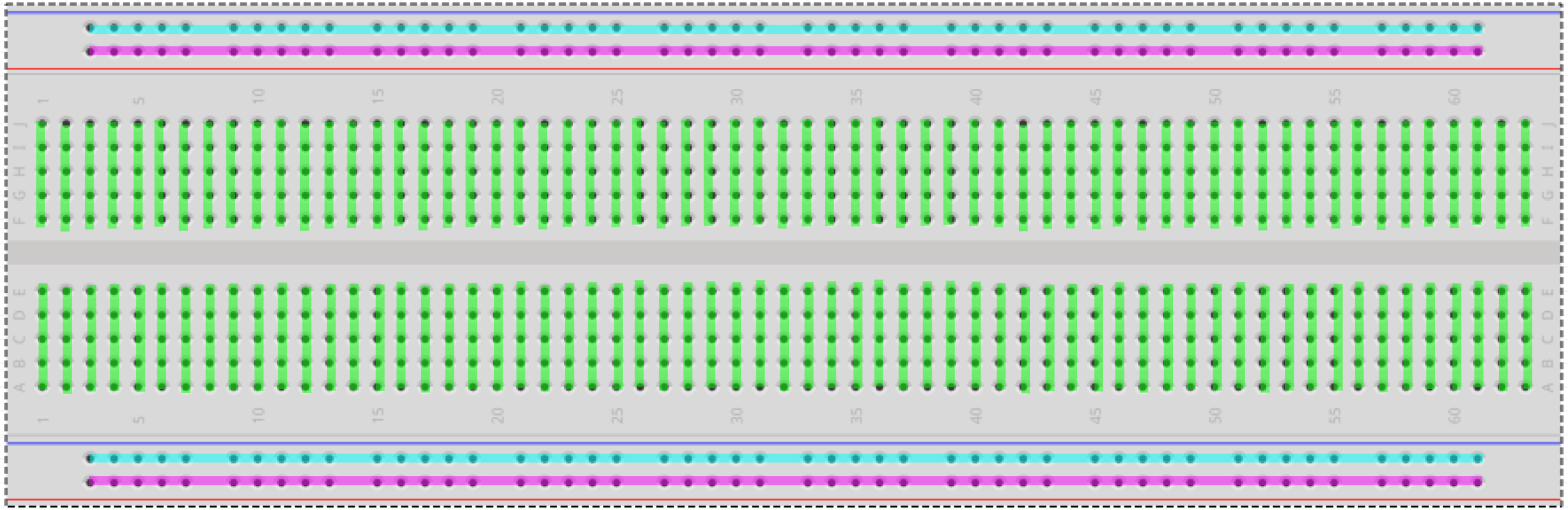

Blinking LEDs

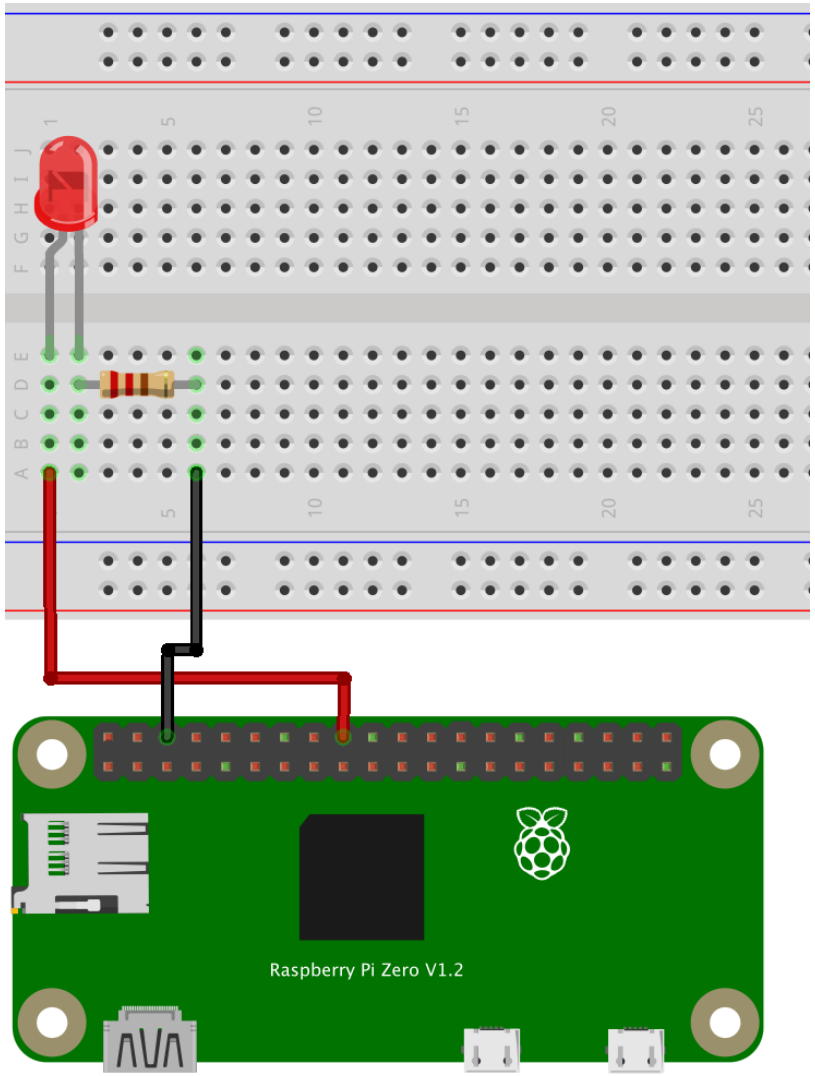

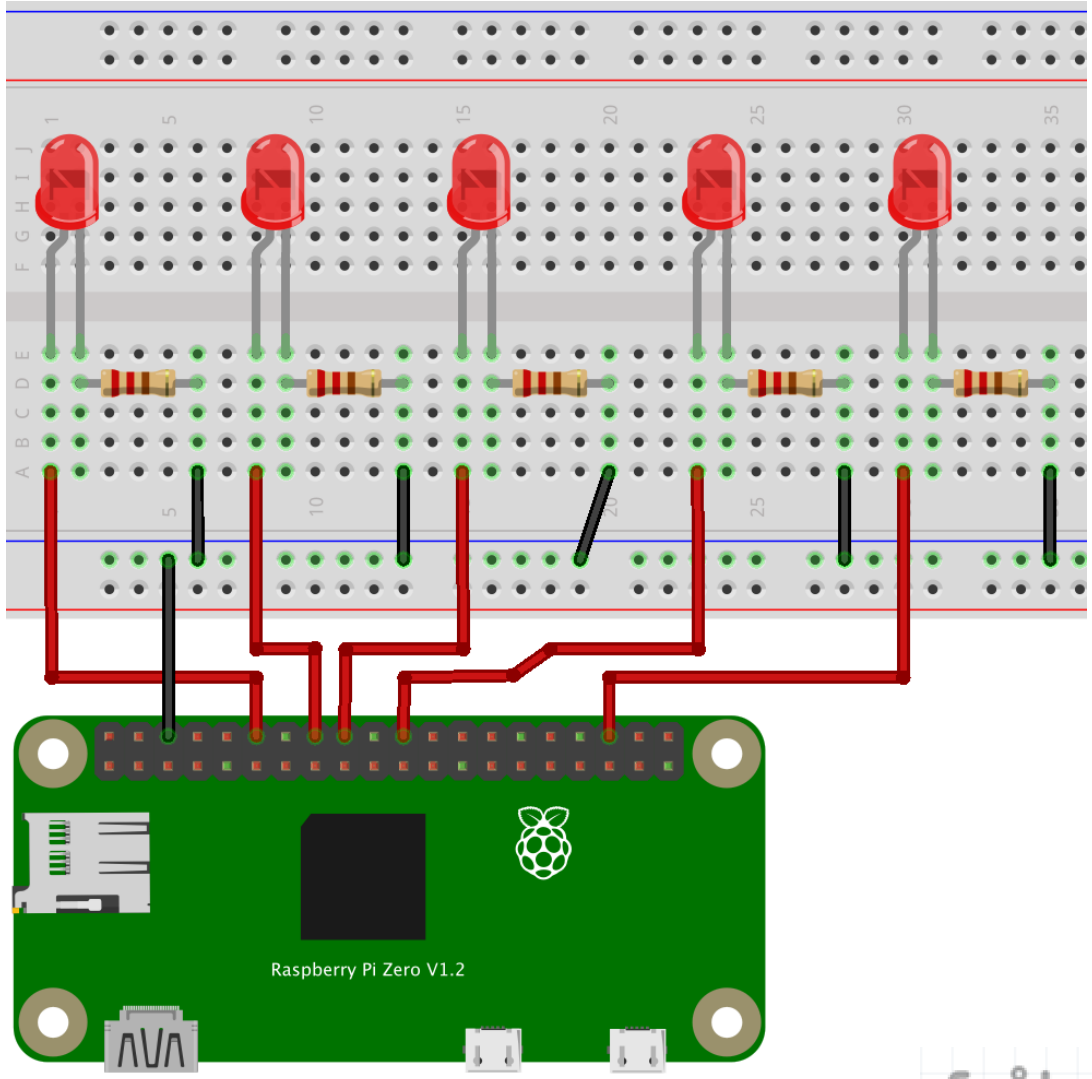

Drawn by fritzing

How to Choose An Appropriate Resistor?

Data sheet from the LED used: V_F = 2.2 V, I_F = 20 mA

Symbol	Parameter	Device	Typ.	Max.	Units	Test Conditions
λpeak	Peak Wavelength	Green	565		nm	I_F=20mA
λD	Dominate Wavelength	Green	568		nm	I_F=20mA
Δλ1/2	Spectral Line Half-width	Green	30		nm	I_F=20mA
C	Capacitance	Green	15		pF	V_F= 0V;f=1MHz
V_F	Forward Voltage	Green	2.2	2.5	V	I_F=20mA
I_R	Reverse Current	Green		10	uA	V_R = 5V

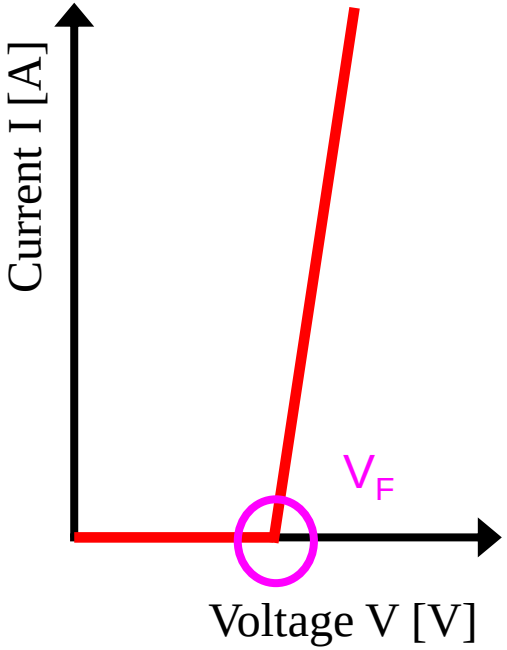

1. V_R = 3.3 – 2.2 = 1.1 V
2. GPIO output current for each pin is limited within 16mA!
3. R > (1.1V)/(16mA)= 68.75 Ω

For example, If you choose 100 Ω, current will be 11mA. (=1.1/100).

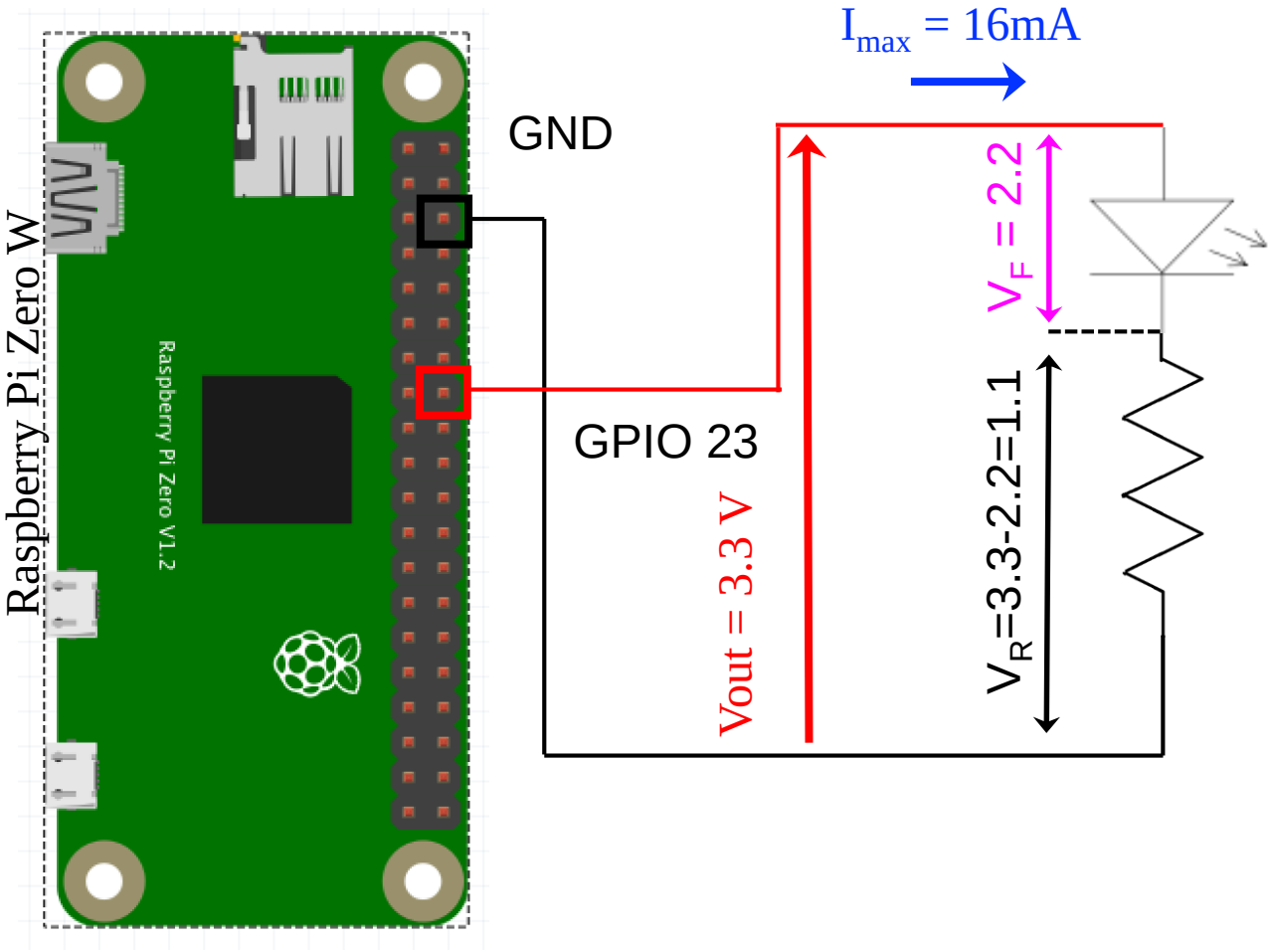

Python Scripts for LED Blinking

blink_led.py

```python
1  import wiringpi as pi
2  import time
3
4  LED_PIN = 23
5
6  pi.wiringPiSetupGpio()
7  pi.pinMode( LED_PIN, pi.OUTPUT )
8
9  while True:
10     pi.digitalWrite( LED_PIN, pi.LOW )
11     time.sleep( 1 )
12
13     pi.digitalWrite( LED_PIN, pi.HIGH )
14     time.sleep( 1 )
15
```

#1: import wiringpi as pi (for GPIO)
#2: import time module (including stop method in seconds (s) that are defined)

#4: Setting the led pin

#6&7: Setting the GPIO mode as “output”=pi.OUTPUT

#10 Output from LED_PIN, here, pi.LOW means 0V (=no output)

#11 Output from LED_PIN, here, pi.HIGH means 3.3V (=default Digital output [V])

Question 1: How to code the script to blink 5 LEDs?

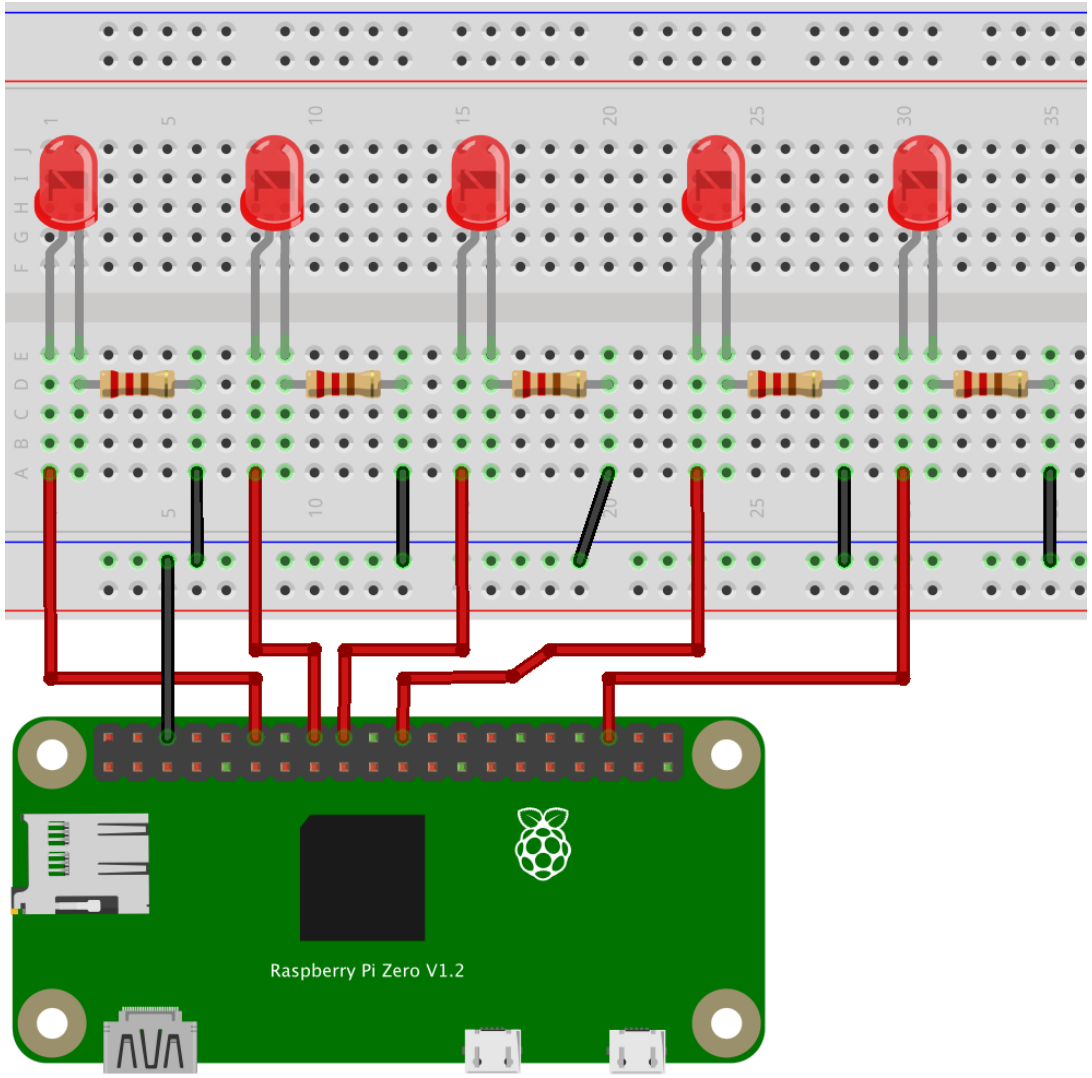

blink_led.py

```
import wiringpi as pi
import time
```

?

Question 2: How to Change Brightness of LEDs?

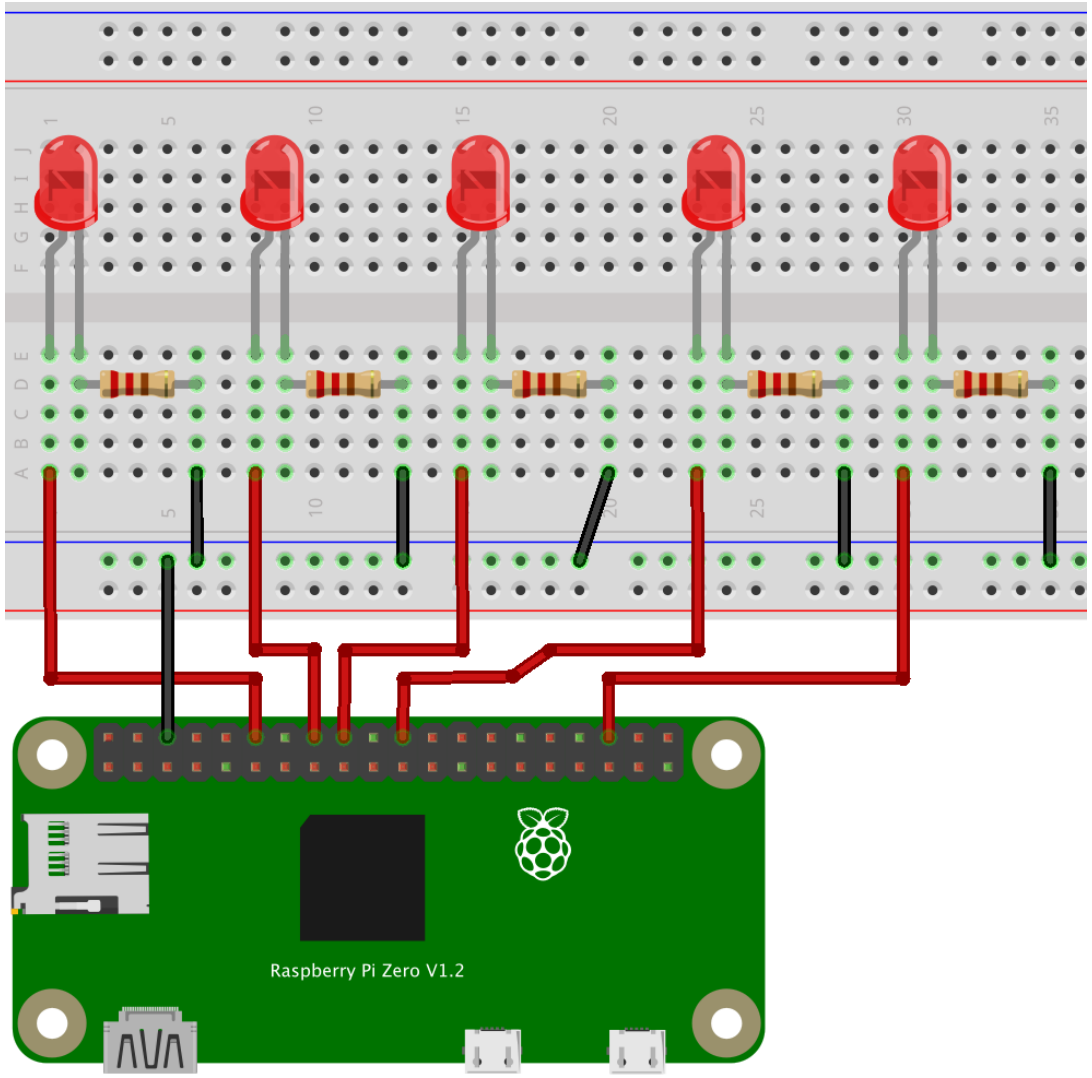

blink_led.py

```
import wiringpi as pi
import time
```

?

Pulse Width Modulation (PWM)

Output modulation like “analog” signal by using only digital output signal!

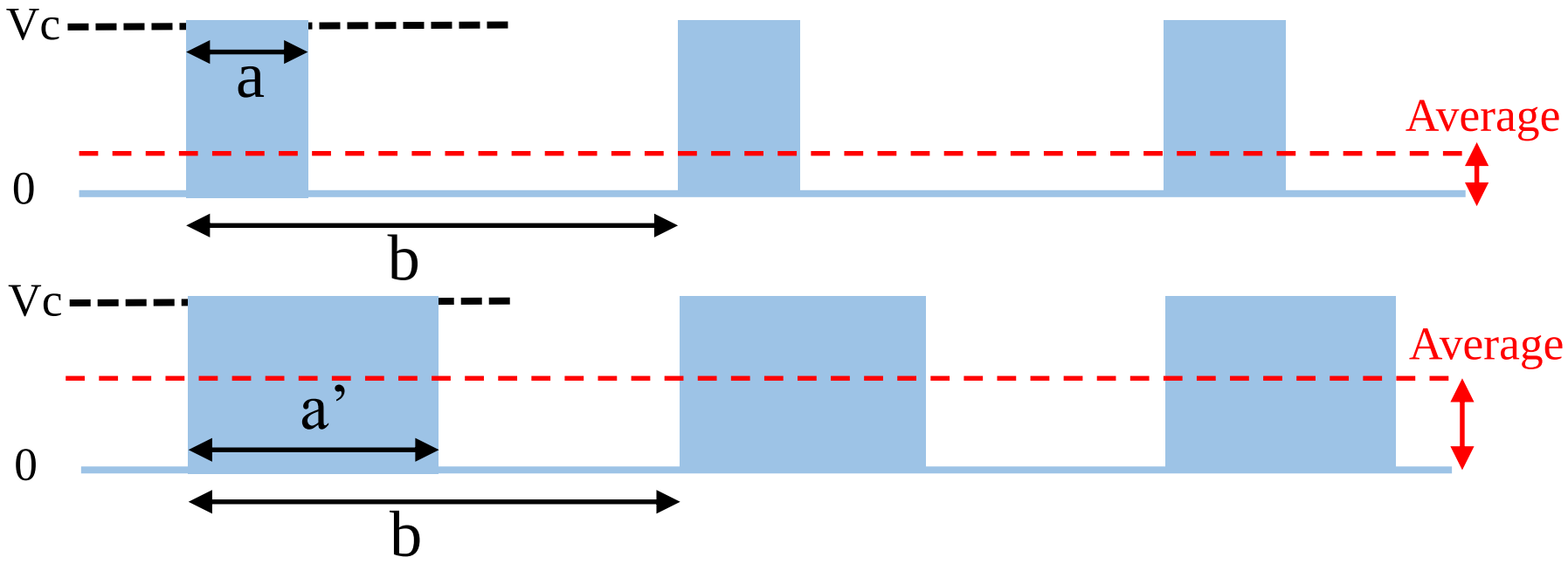

PWM signals: change in average value by only modulating pulse width (a or a’) with the fixed pulse period (b)

Python script for “software” PWM in Raspi

pwm_led.py servo2.py

```python
1  import wiringpi as pi
2  import time
3
4  LED_PIN = 23
5
6  pi.wiringPiSetupGpio()
7  pi.pinMode( LED_PIN, pi.OUTPUT )
8
9  pi.softPwmCreate( LED_PIN, 0, 100 )
10
11 while True:
12     pi.softPwmWrite( LED_PIN, 0 )
13     print("Duty Factor:0%")
14     time.sleep(0.5)
15
16     pi.softPwmWrite( LED_PIN, 50 )
17     print("Duty Factor:50%")
18     time.sleep(0.5)
19
20     pi.softPwmWrite( LED_PIN, 100 )
21     print("Duty Factor:100%")
22     time.sleep(0.5)
23
24     pi.softPwmWrite( LED_PIN, 50 )
25     print("Duty Factor:50%")
26     time.sleep(0.5)
27
```

#1: import wiringpi as pi (for GPIO)
#2: import time module

#4: Setting the led pin

#6&7: Setting the GPIO mode
as “output”=pi.OUTPUT

#9 Setting PWM range (0 to 100) of LED_PIN

#12 Setting PWM output (0) of LED_PIN

Please check how the brightness are changed according to the parameter (duty factor)

Question 3: Change the Brightness of 5 LEDs, respectively

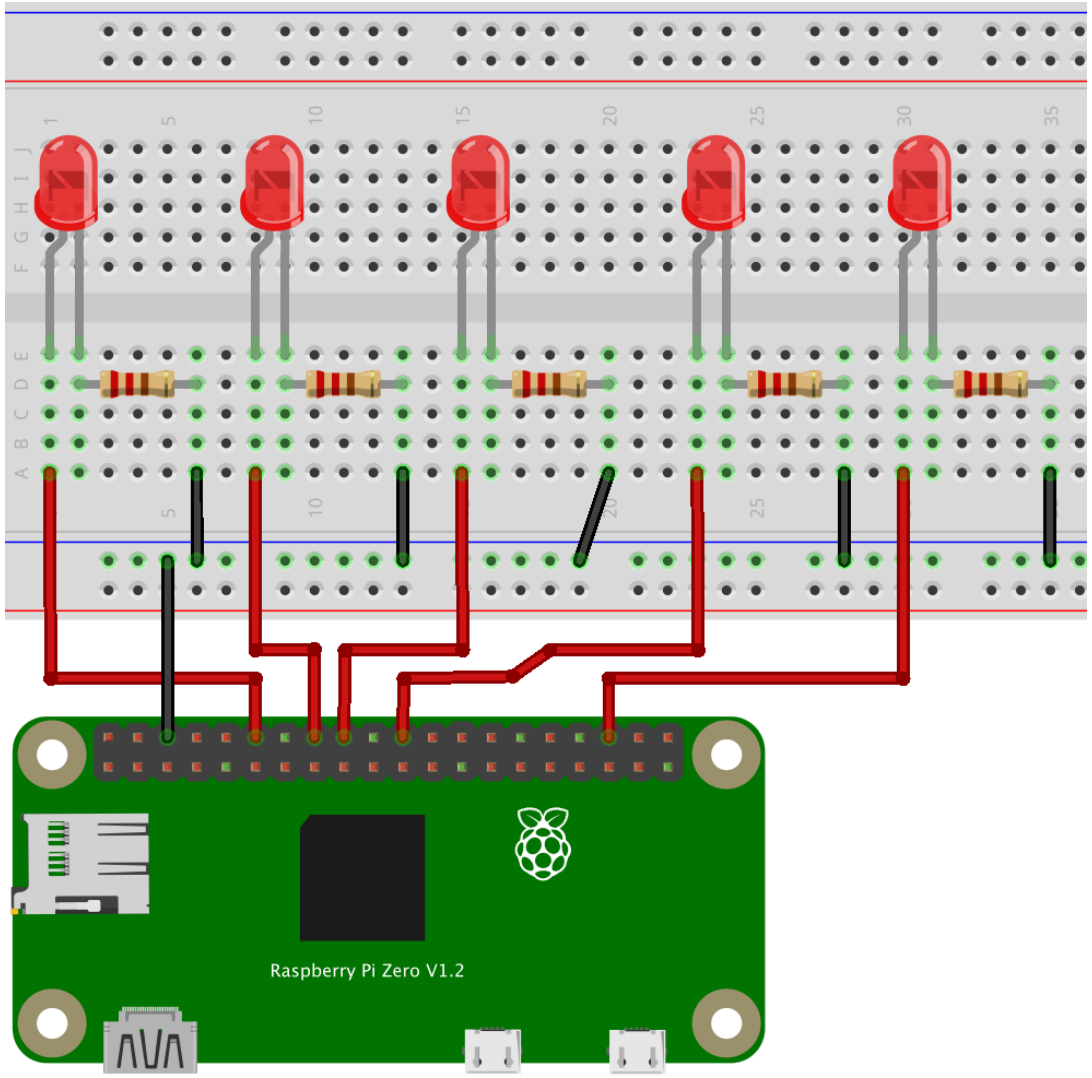

blink_led.py

```
import wiringpi as pi
import time
```

?

What is a *Motor*?

- ✓ Driving force (torque) source (Actuator) for Robots
- ✓ AC(Alternate current) motors, DC(Direct current) motors, Stepping motor, Servo motors, etc.

What is a *Servo Motor*?

- ✓ For precise control of angular or linear position, velocity, and acceleration
- ✓ A servomotor is a closed-loop servomechanism that uses <u>position</u> feedback to control its motion and final <u>position</u>.
- ✓ Servo motor includes an encoder (detect position, velocity, etc.), a control circuit for precise control (e.g. PD control), a DC motor, and some gears.

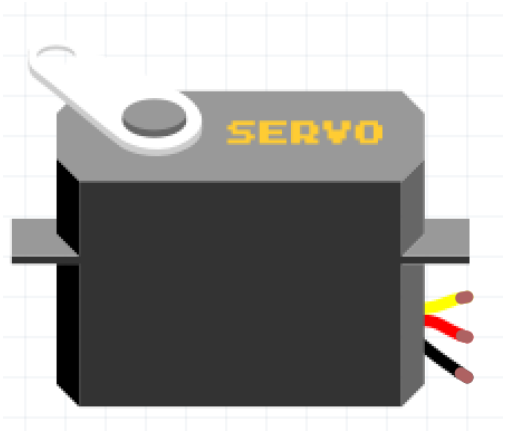

Position (Angle) Control via PWM , e.g., SG90

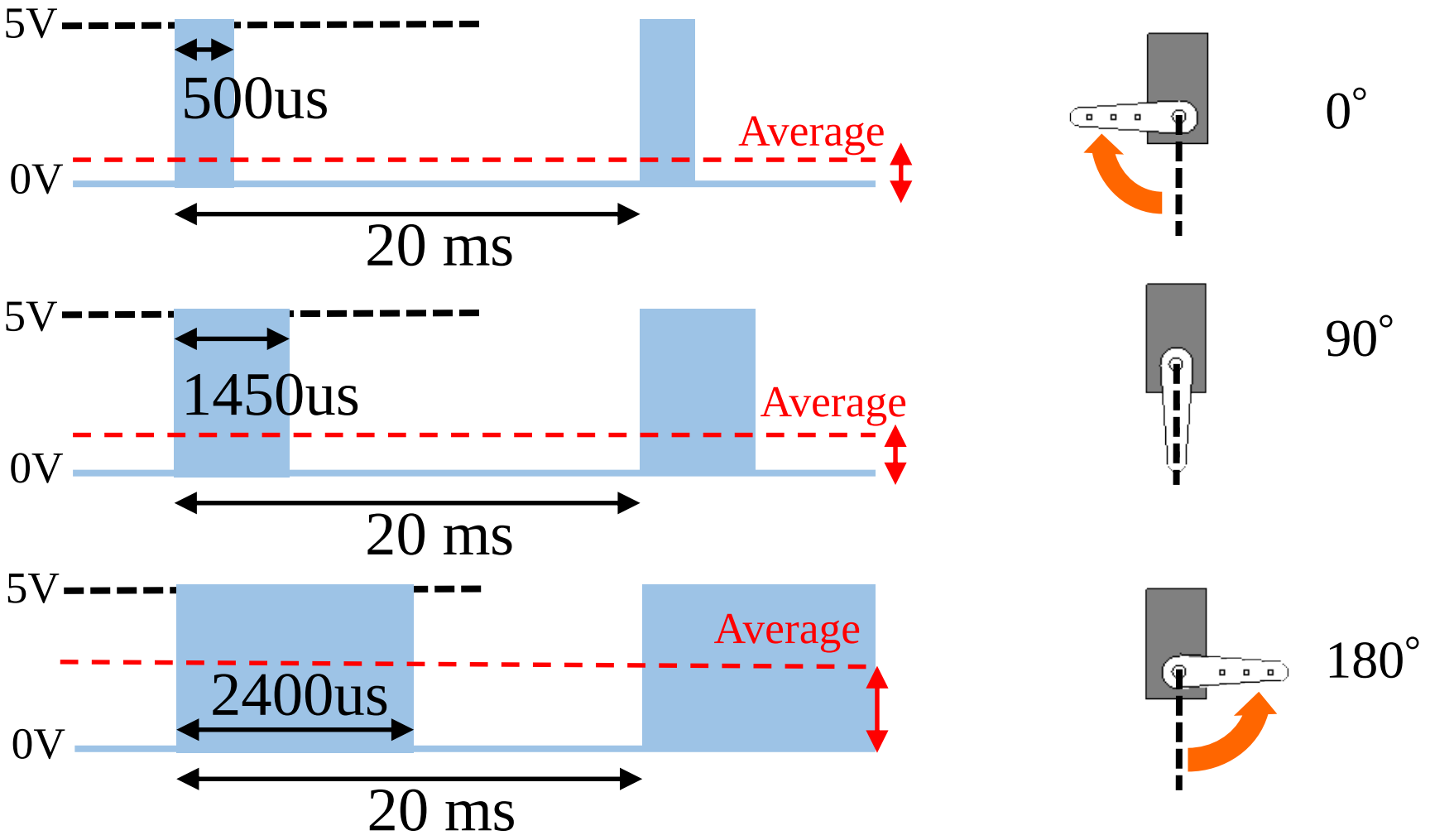

Note: Parameters for PD control on servo motors depends on the individual motors, thus please check the datasheet of the corresponding motors.

“Software” PWM and “Hardware” PWM

To control a servo motor, signal wave form should be precise, because unstable signal make motor behavior unstable.

“Software” PWM (we use it to control LED brightness) is not sufficient to control a servo motor. Control of a servo motor requires precise PWM wave from (the required resolution is about 0.1ms).

In Wiringpi, we can use “hardware” PWM that generated by CPU (SoC) clock timer on GPIO18 (12pin) & GPIO13 (33pin).

Deactivate Audio Output

Audio output of Raspberry Pi would effect the (hardware) PWM signals, because audio output also use hardware PWM to generate sounds.

$ sudo nano /boot/config.txt

comment out the following sentence:

#dtparam=audio=on

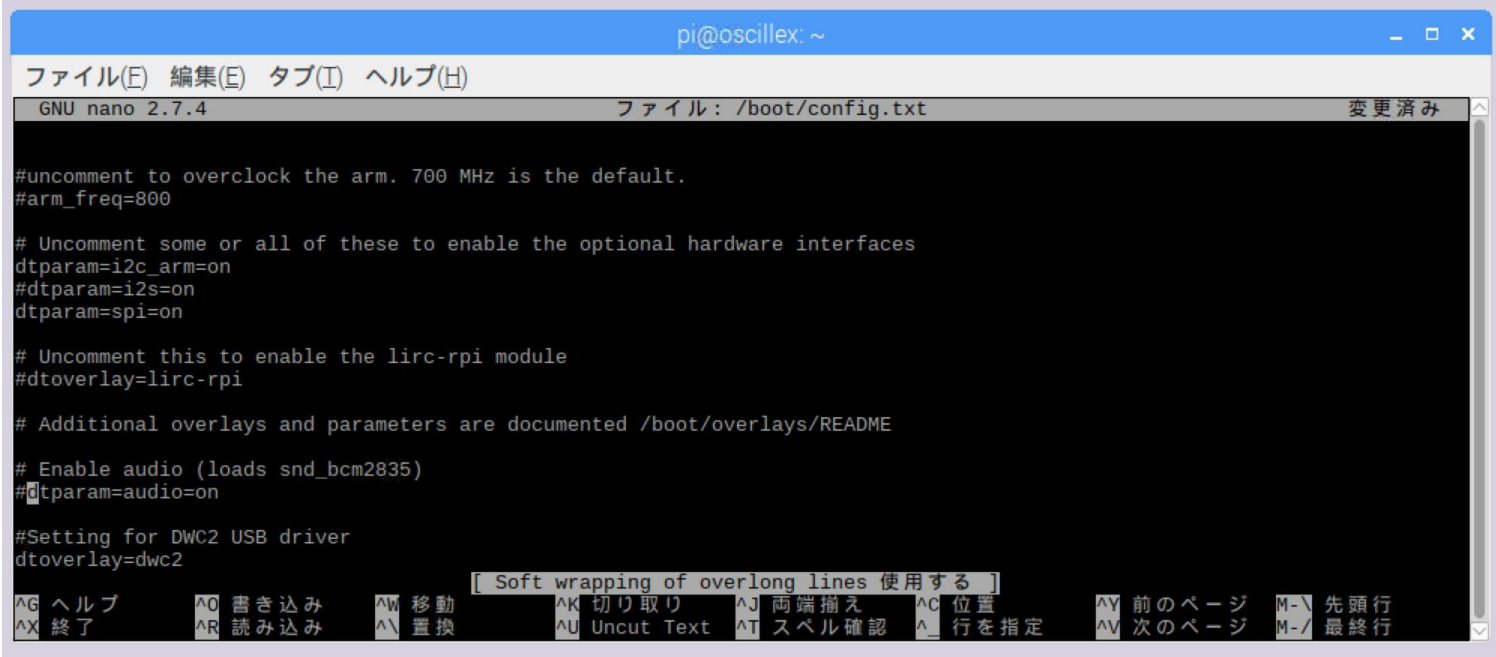

Control of a Servo Motor with “Hardware” PWM

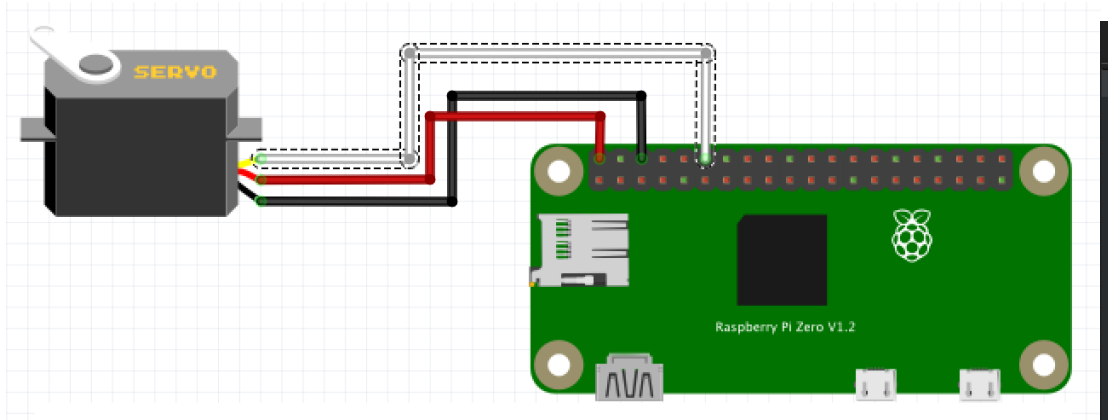

$ sudo python servo2.py

For ”hardware” PWM, you should use sudo to access CPU (SoC)

pwm_led.py | servo2.py

```python
import wiringpi as pi
import time

servo_pin = 18  # GPIO pin for servo motor

CYCLE = 20      # pwm period of motots [20 ms]
MIN_PULSE = 0.5 # minimun pulse width for pwm [ms]
MAX_PULSE = 2.4 # maximun pulse width for pwm [ms]
MIN_DEG = 0     # minimun angle [deg]
MAX_DEG = 180   # maximun angle [deg]
RANGE = 2000    # resolusion for PWM signal

clock = int( 19.2 / float(RANGE) * CYCLE * 1000 ) # calculate pwm clock
min_val = RANGE * MIN_PULSE / CYCLE         # minimum pulse width
max_val = RANGE * MAX_PULSE / CYCLE         # maximun pulse width

pi.wiringPiSetupGpio()                      # setting GPIO
pi.pinMode( servo_pin, pi.GPIO.PWM_OUTPUT ) # output as "hardware" PWM
pi.pwmSetMode( pi.GPIO.PWM_MODE_MS )        #
pi.pwmSetRange( RANGE )                     # set PWM Range (Resolution)
pi.pwmSetClock( clock )                     # set PWM Clock

# definition of function Angle to Pulse width for PWM
def Angle_to_PWM(angle):
    return int( ((max_val-min_val)/MAX_DEG) * angle + min_val )


while True:
    pi.pwmWrite( servo_pin, Angle_to_PWM(90) )
    print("middle 90 deg")
    time.sleep(1)

    pi.pwmWrite( servo_pin, Angle_to_PWM(0) )
    print("left 0 deg")
    time.sleep(1)

    pi.pwmWrite( servo_pin, Angle_to_PWM(90) )
    print("middle 90 deg")
    time.sleep(1)

    pi.pwmWrite( servo_pin, Angle_to_PWM(180) )
    print("right 180 deg")
    time.sleep(1)
```

$$\text{PWM period (20 [ms])} = \frac{1}{19.2 * 10^6[\text{Hz}]/\text{clock}} * \text{range}$$

$19.2 * 10^6[\text{Hz}]$: base clock frequency for PWM

$(19.2 * 10^6)/\text{clock}[\text{Hz}]$: PWM counter frequency

range : PWM resolution

#18: Setting for Hardware PWM
#19: Set Mark Space mode (Default=Balanced mode)

$$\text{clock} = 20 * 10^{-3} * 19.2 * 10^6/\text{range}$$

Thanks for Listening!!!

Looking forward to working with you all ^^